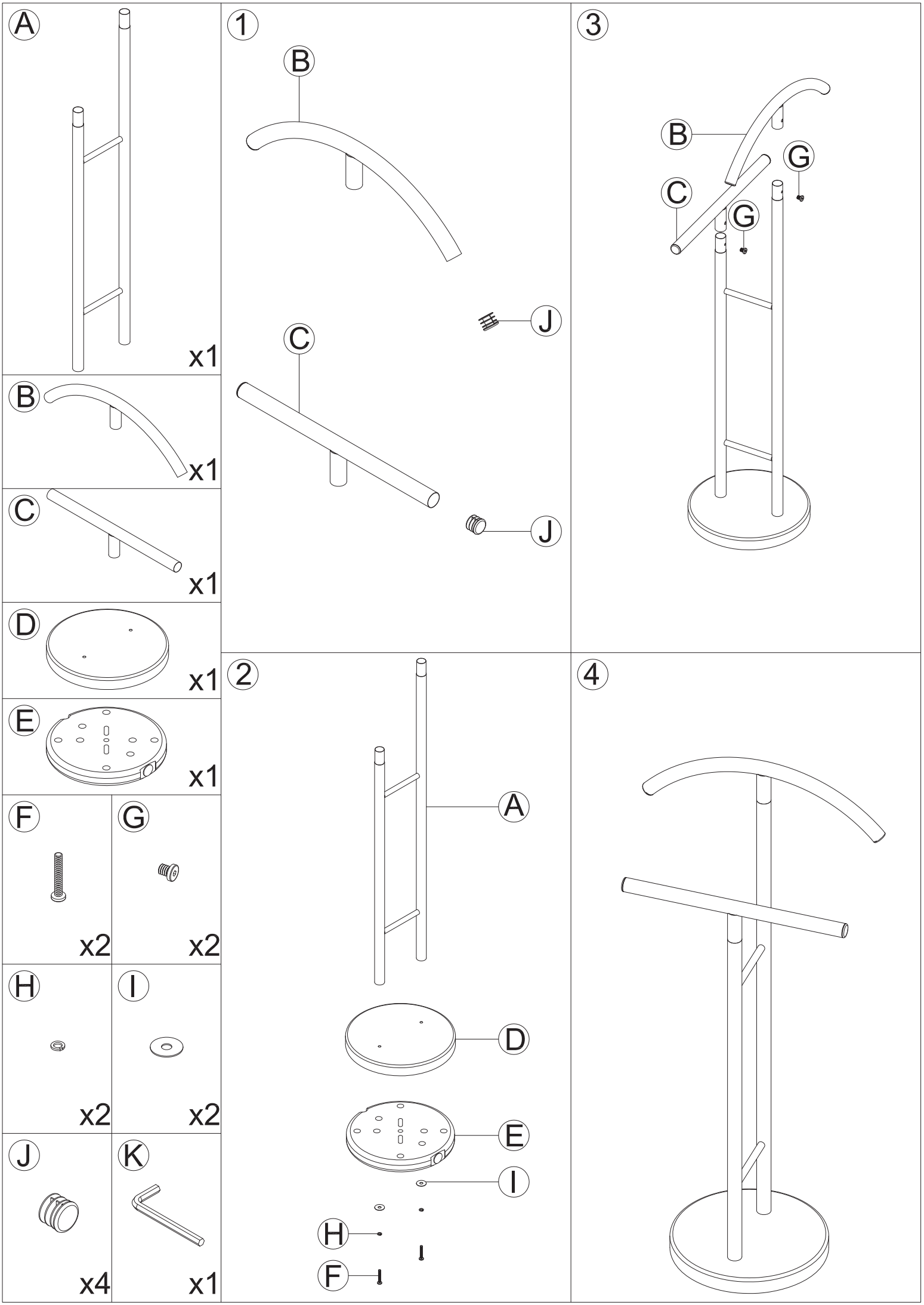
A
x1
B
x1
C
x1
D
x1
E
x1
F
x2
G
x2
H
x2
I
x2
J
x4
K
x1
1
B
J
C
J
2
A
D
E
I
H
F
3
B
G
C
G
4