ASSEMBLY INSTRUCTIONS
ITEM NO: B603

Please Note that the warning sticker is placed on the toddler bed to keep parents & caregivers informed. This is a requirement by the law under CPSC & ASTM. We do apologize for any inconvenience this may cause you.

Adult assembly required.
Small parts may present choking hazard prior to assembly.
Enclosed please find simple step-by-step instructions to help you assemble your products.
Before you begin we recommend that you follow the steps below:

1. Please read the instructions thoroughly.
2. Identify all parts and hardware.
3. You will need the following tools:
   - Philips head screw driver
   - Flat head screw driver
   - Hammer (Do Not Use Power Drills or Drivers)

To protect your parts during assembly please place them on a soft surface.
To clean product use only water on a damp cloth. Do not use window cleaners or cleaning abrasives as it will scratch the surface and could damage the protective coating.

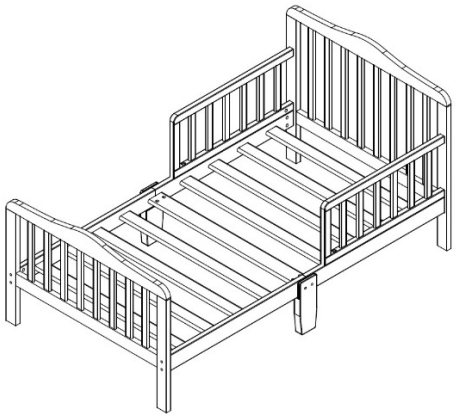

⚠ WARNING !

- FAILURE TO FOLLOW THESE WARNINGS AND ASSEMBLY INSTRUCTIONS COULD RESULT IN SERIOUS INJURY OR DEATH.
- READ ALL INSTRUCTIONS BEFORE ASSEMBLING CRIB.
- KEEP INSTRUCTIONS FOR FUTURE USE.
- UPON COMPLETION OF ASSEMBLY, MAKE SURE ALL SCREWS, BOLTS AND FASTENERS HAVE BEEN SECURELY TIGHTENED.
- A FREQUENT AND PEDRIODIC CHECK SHOULD BE MADE TO CONFIRM ALL THE SCREWS AND NUTS REMAIN TIGHT.
- NEVER USE THIS PRODUCT IF THERE ARE ANY LOOSE, MISSING FASTENERS, LOOSE JOINTS, BROKEN PARTS, OR TORN MESH/FABRIC. CONTACT MANUFACTURER FOR REPLACEMENT PARTS OR INSTRUCTIONAL LITERATURE.
- NEVER SUBSTITUTE PARTS.
- THE PRODUCT INCLUDING SIDE RAILS WHICH MUST BE FULLY ERECTED PRIOR TO USE.
- NEVER USE BED FOR INFANTS AS A CRIB, THE TODDLER BED IS USED FOR A CHILD BETWEEN THE AGES OF 15 MONTHS TO 5 YEARS WITH A MAXIMUM WEIGHT OF 50 POUNDS (22.7KG).
- NEVER USE PLASTIC SHIPPING BAG OR OTHER PLASTIC FILM AS A MATTRESS COVER WHICH CAN CAUSE SUFFOCATION.

CAUTION ENTRAPMENT HAZARD:

- TO AVOID DANGEROUS GAPS, ANY MATTRESS USED IN THIS BED SHALL BE FULL SIZE CRIB MATTRESS AT LEAST 51-58IN (1310MM) IN LENGTH, 27-1/4IN (690MM) IN WIDTH AND 4IN (100M) IN THICKNESS, OR GREATER, BUT NOT EXCEED 5IN.
- NEVER USE A WATER MATTRESS WITH THIS TODDLER BED.
- WARNING: INFANTS HAVE DIED IN TODDLER BEDS FROM ENTRAPMENT. OPENINGS IN AND BETWEEN BED PARTS CAN ENTRAP HEAD AND NECK OF A SMALL CHILD.

WARNING STRANGULATION HAZARD:

- STRINGS CAN CAUSE STRANGULATION! NEVER PLACE BED NEAR WINDOW WHERE THERE ARE CORDS FROM BLINDS OR DRAPES.
- NEVER PLACE ITEMS WITH A STRING CORD, OR RIBBON, SUCH AS HOOD STRINGS, PACIFIER CORDS AROUND A CHILS'S NECK. THESES ITEMS MAY CATCH ON BED PARTS.
- TO REDUCE THE RISK OF SIDS, PEDIASTRICIANS RECOMMED HEALTHY INFANTS BE PLACED ON THEIR BACK TO SLEEP, OR ADVICE YOUR PHYSICIAN.
- DO NOT USE BED IF THE SPACE BETWEEN BED AND SOLID OBJECTS IS LESS THAN 12IN (31CM), A CHILD COULD SLID INTO THE SPACE AND SUFFOCATE.
- IF REFINISHING, USE A NON-TOXIC FINISH SPECIFIED FOR CHILDREN'S PRODUCTS.
- TO WASH, CLEAN WITH MILD SOAP AND DAMP CLOTH.
- TO STORE, KEEP IN A COOL PLACE.

MADE IN CHINA

HARDWARE AND TOOL DIAGRAM

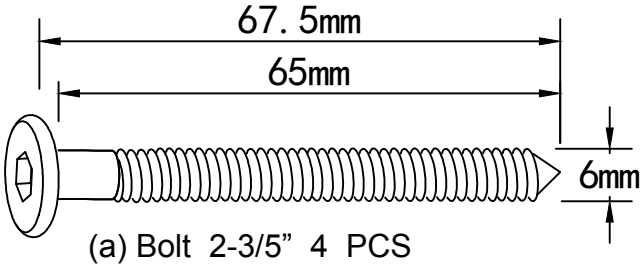

(a) Bolt 2-3/5" 4 PCS

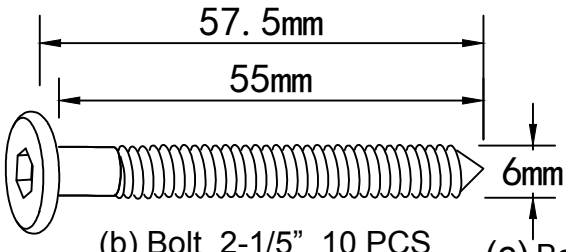

(b) Bolt 2-1/5" 10 PCS

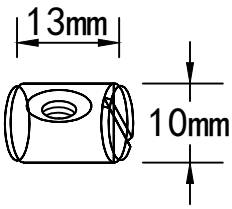

(c) Barrel Nut 14 PCS

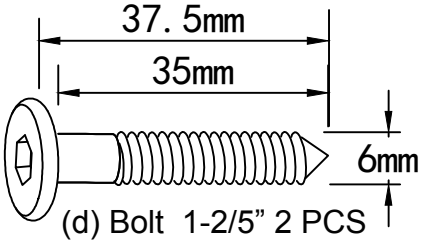

(d) Bolt 1-2/5" 2 PCS

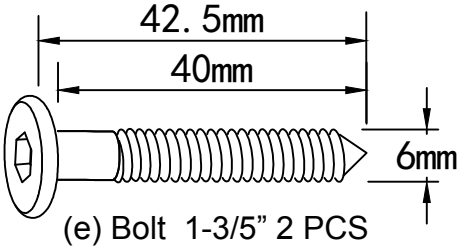

(e) Bolt 1-3/5" 2 PCS

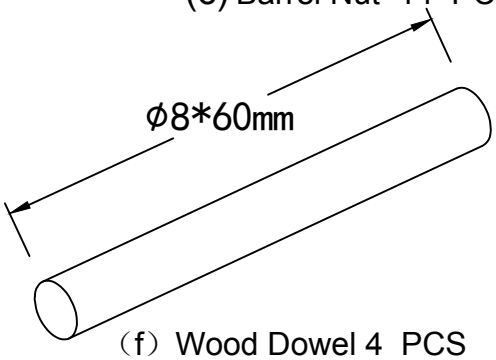

(f) Wood Dowel 4 PCS

(j) Allen Wrench 1 PC

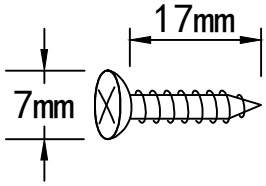

(h) Selfdrilling screw 8 PCS

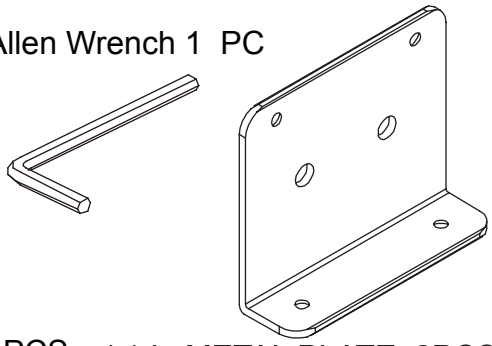

(g) L METAL PLATE 2PCS

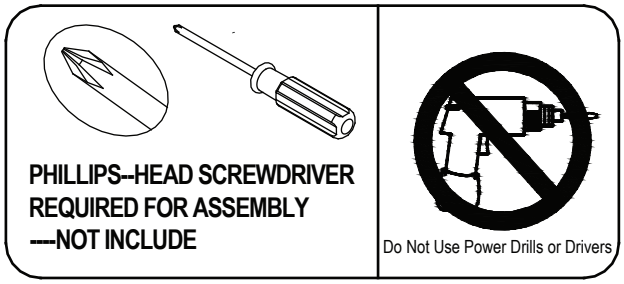

COMPONENT PARTS

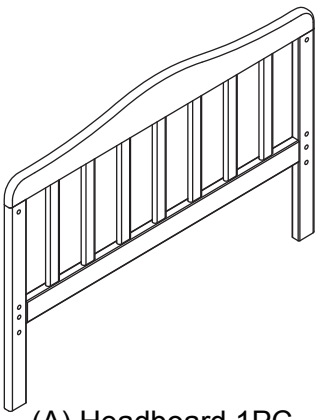

(A) Headboard 1PC

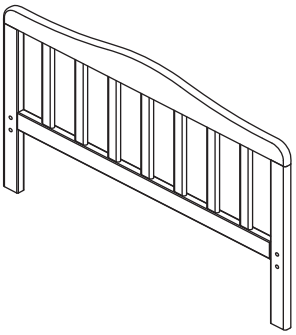

(B) Footboard 1PC

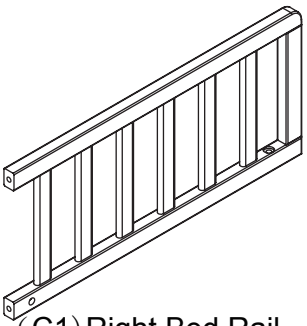

(C1) Right Bed Rail

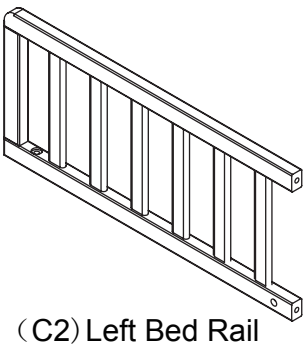

(C2) Left Bed Rail

(C) Bed Rail 2 PCS

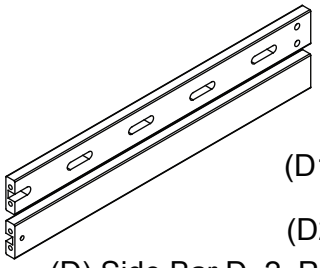

(D1) Right Side Bar D

(D2) Left Side Bar D

(D) Side Bar D 2 PCS

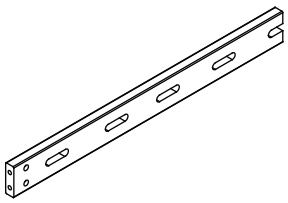

(E) Side Bar E 2 PCS

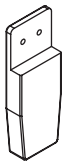

(F) Split leg 2PCS

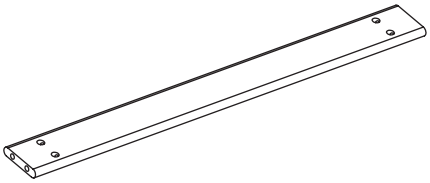

(G) Middle Cross Bar 1 PC

(H) Cross Bar 8 PCS

STEP# 1

Connect (D1) Right Side Bar & (E) Side Bar and (D2) Left Side Bar& (E) Side Bar with Wood Dowel (f). Fasten them by adding Plates (G) using Drilling Screws (H).

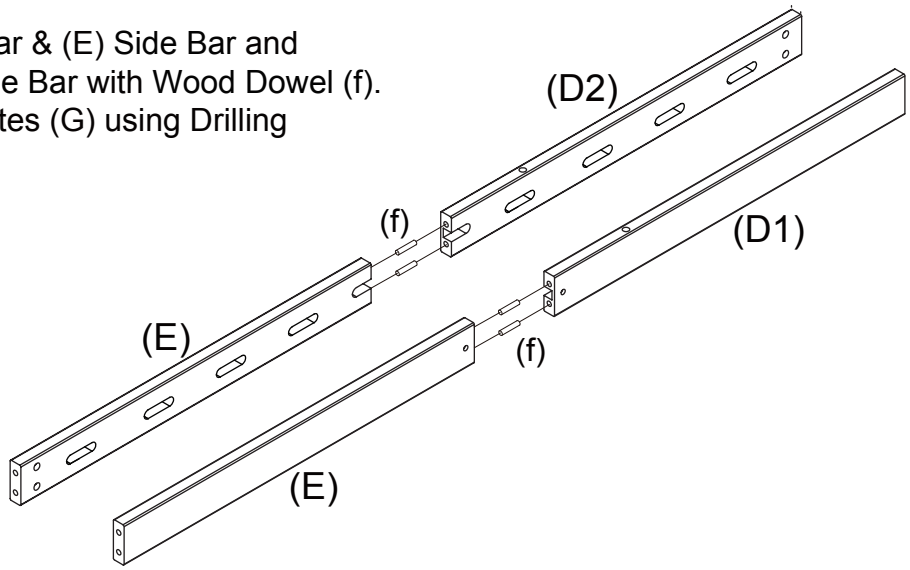

STEP# 2

Insert the cross bar(H&G) into the left side bar (D2&E).Then attach the split legs (F) to the cross middle bar(G) by bolts and barrel nuts(c).

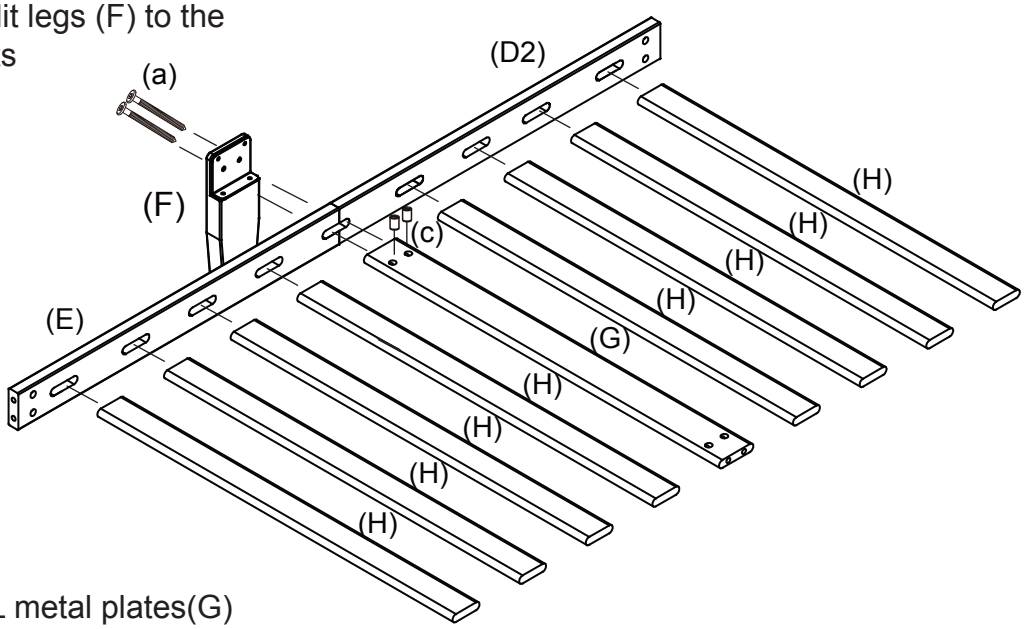

Note: when attaching the L metal plates(G) make sure the holes on the L metal plates(G) match the holes on the side bar(D&E).

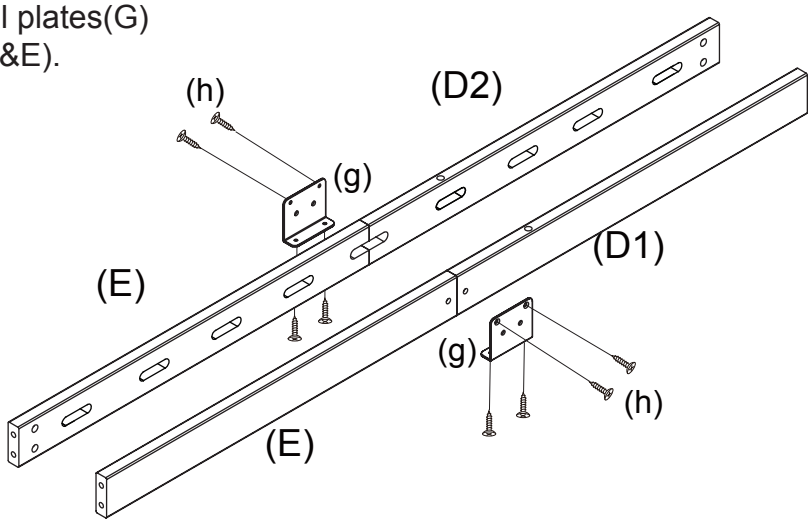

STEP# 3

Insert the cross bar (H&G) into the right side bar (D1&E) . then attach the split legs (F) to the cross middle bar(G) by bolts (a) and barrel nuts (c).

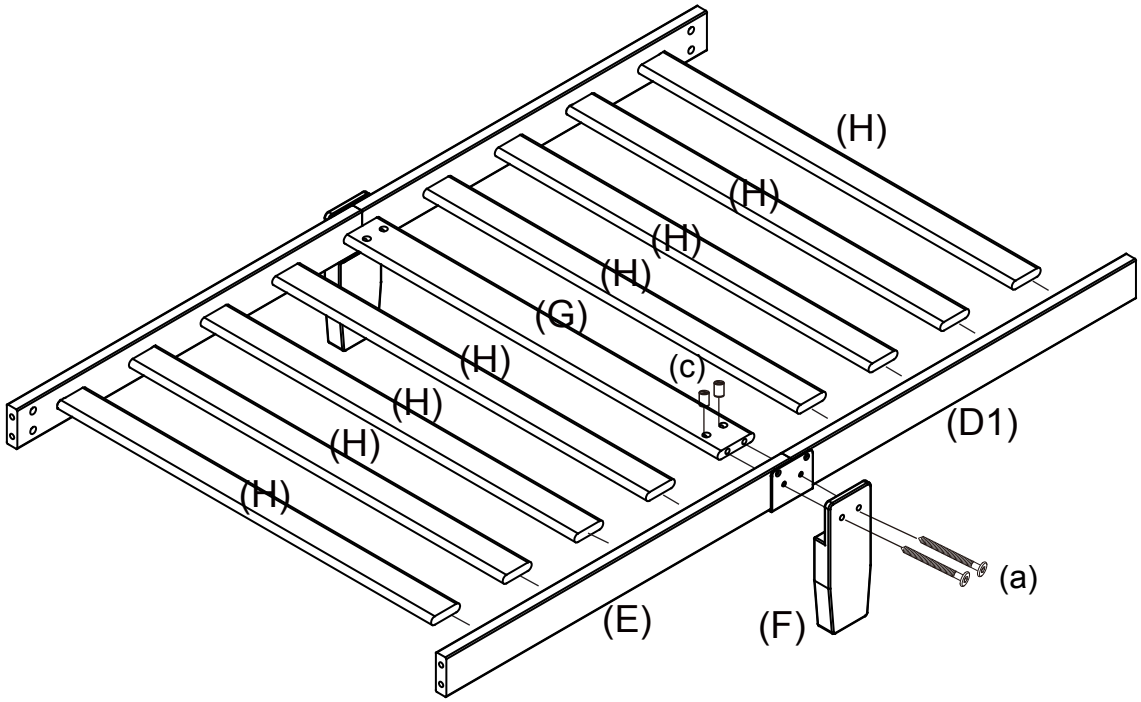

STEP# 4

Connect headboard (A) to the left side bar (D2) & (D1) using Bolts (b) and Barrel Nuts(c).

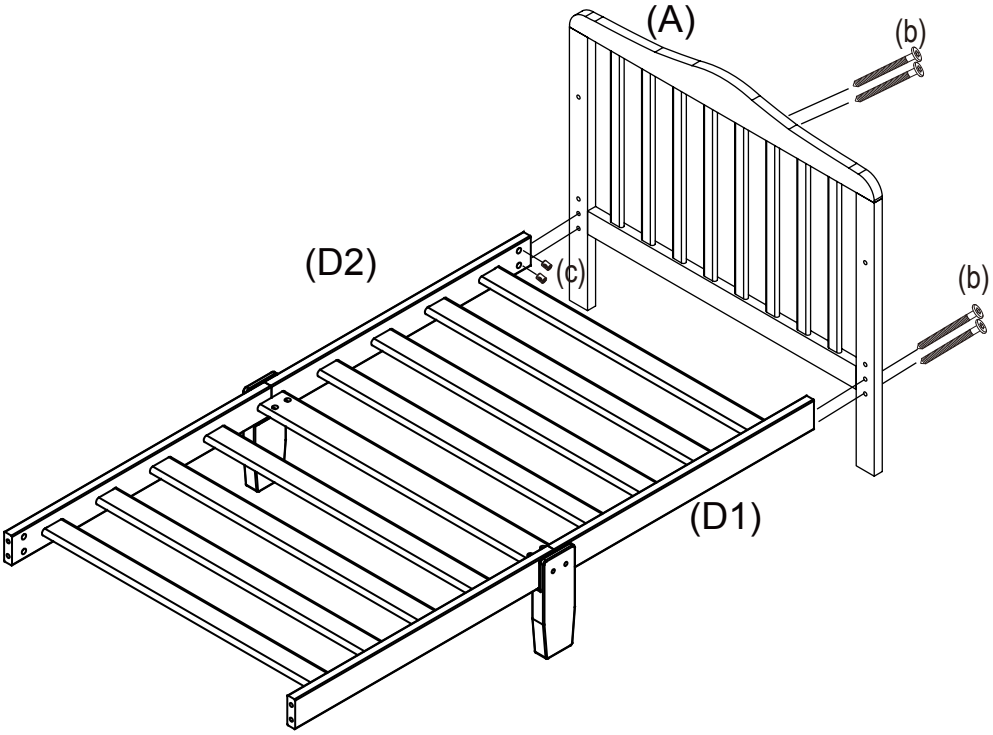

STEP# 5

Connect the side bar (E) to the footboard (B) by using bolts (b) and barrel nuts (c) .

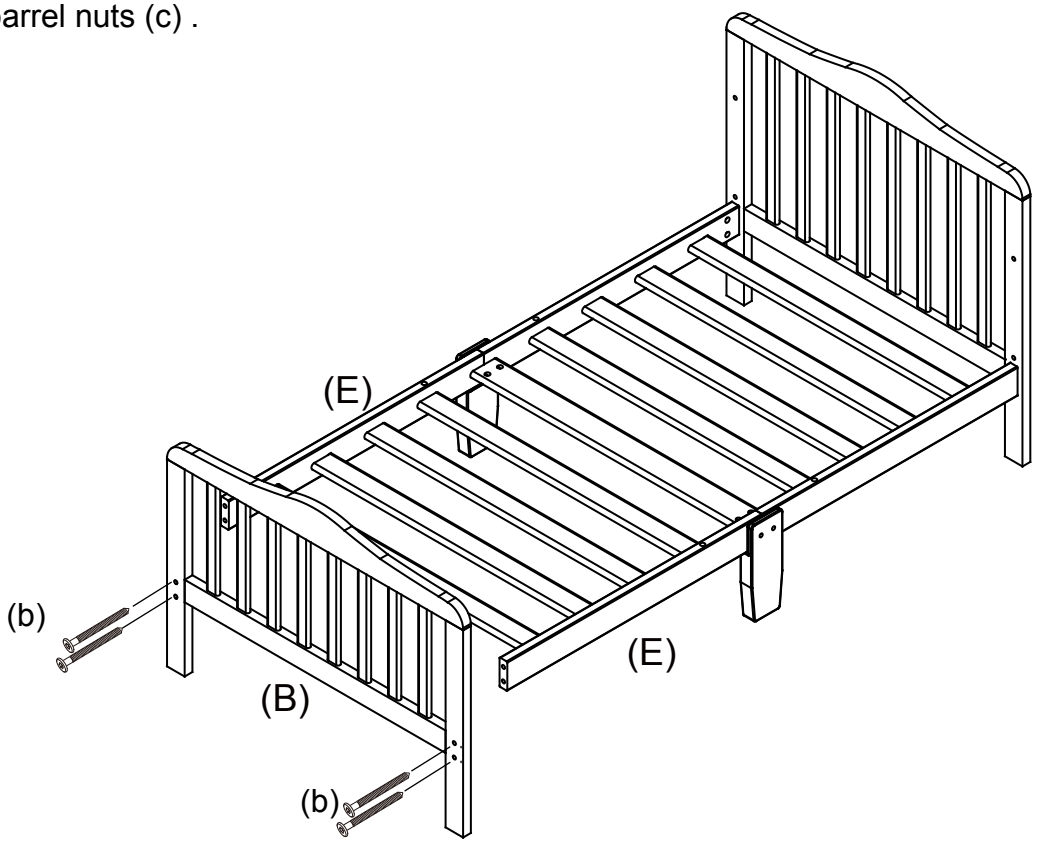

STEP# 6

1.Connect right bed rail (C1) to the right side bar (D1) using bolt (e),Then connect the right bed rail (C1) to the headboard (A) by using bolts (b)&(d) and barrel nut (c).

2.Connect left bed rail (C2) to the left side bar (D2) using bolt (e),Then connect the left bed rail (C2) to the headboard (A) by using bolts (b)&(d) and barrel nut (c).

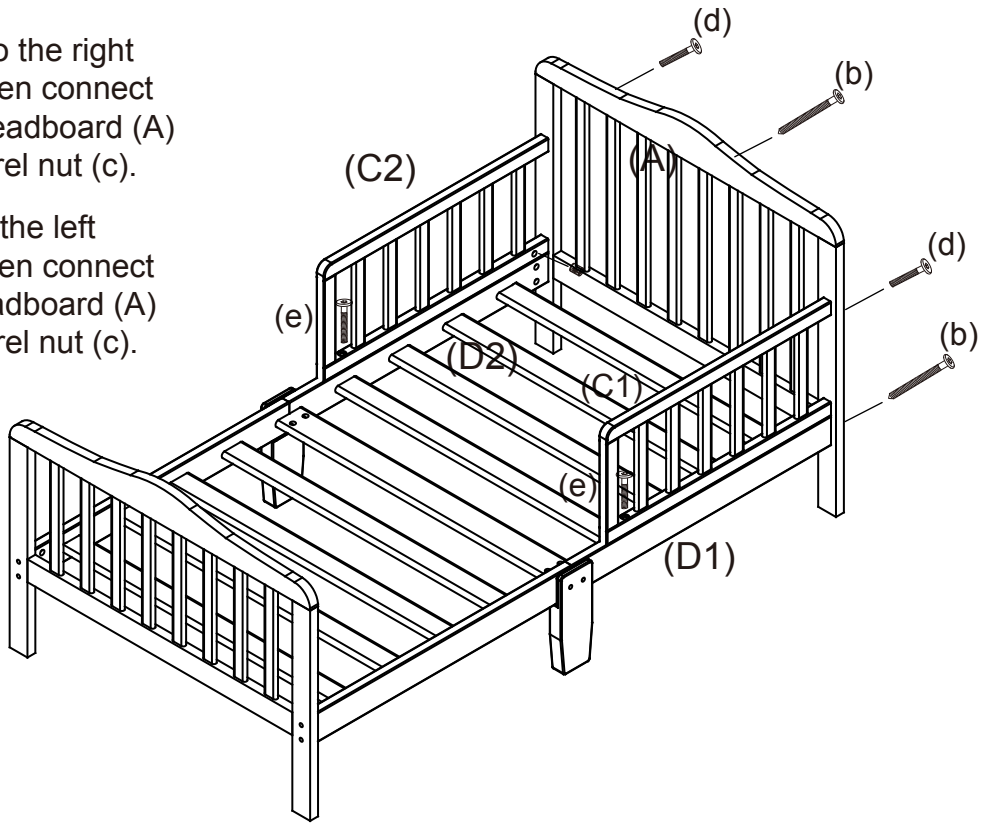

STEP# 7

Make sure all bolts are tightened .

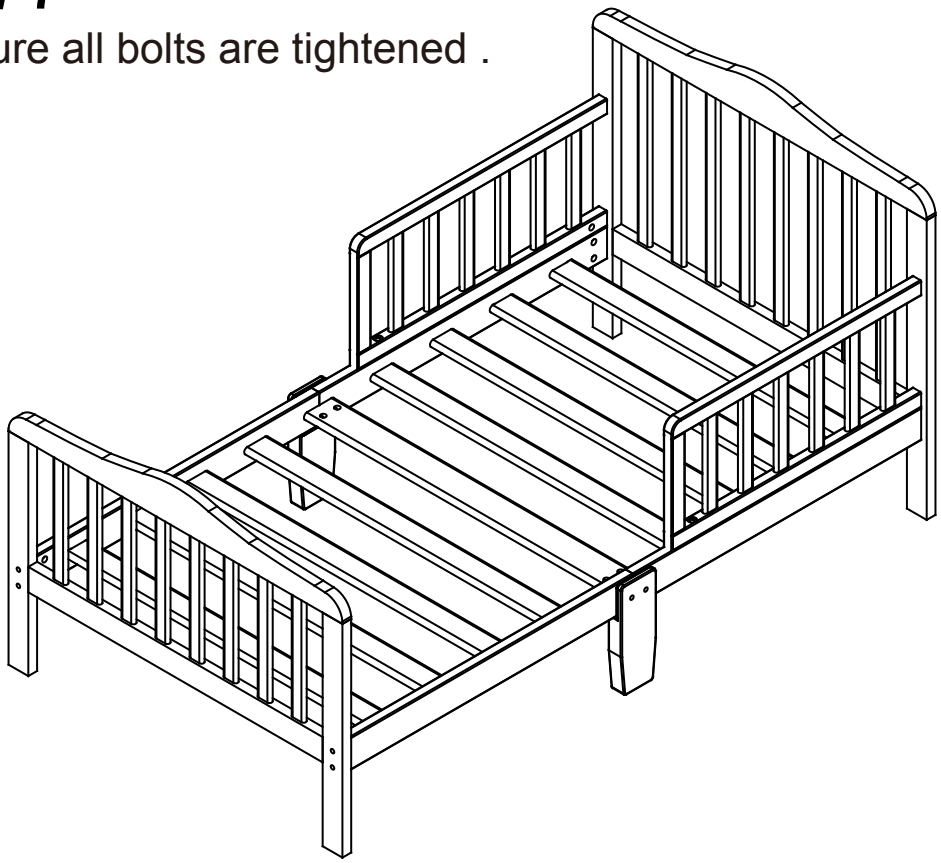

Congratulations,your toddler bed is ready for use!