IN ROOM
FURNITURE DESIGNS

ASSEMBLY INSTRUCTIONS ITEM NO : #900 /901/ 902/ 903-705 JENNY LIND BED BENCH

Thank you for purchasing this quality product. Be sure to check all packing material carefully for small parts that may have come loose inside the carton during shipment .

PART LIST

NO	DESCRIPTION	PICTURE	PTY/ PCS
1	**FRAME CONCEPT**	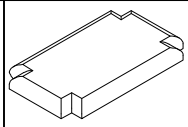	**1 PC**
2	CHAIR SEAT	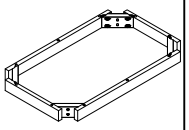	1 PC
3	**CHAIR LEG**	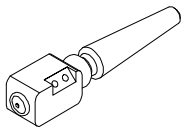	**4 PCS**

HARDWARE LIST

NO	DESCRIPTION	PICTURE	PTY/ PCS
A	JCBB BOLT Ø5/ 16 *60mm		**8 PCS**
B	**SPRING WASHER Ø5/ 16 *13*2mm**		8 PCS
C	**FLAT WASHER Ø5/ 16*19*1.2mm**		8 PCS
D	SCREW Ø4*32mm		**10 PCS**
E	**ALLEN KEY 4*60*20mm**		**1 PC**

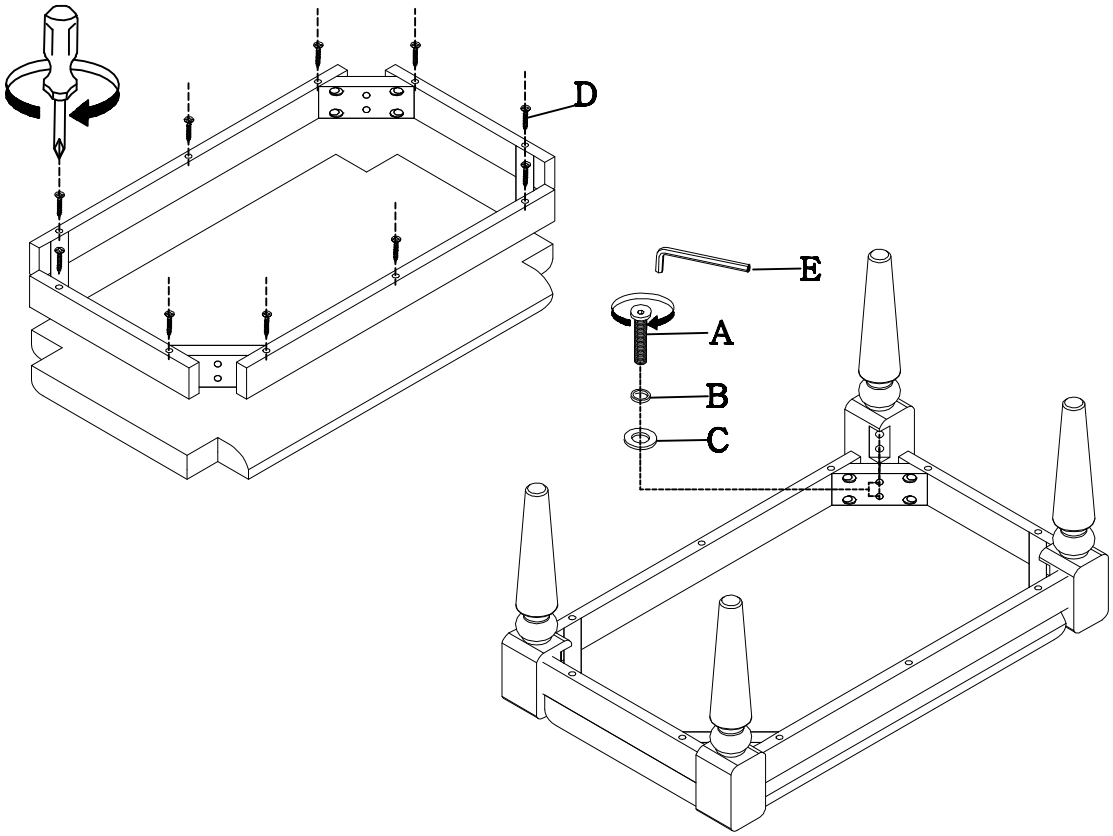

MADE IN VIETNAM